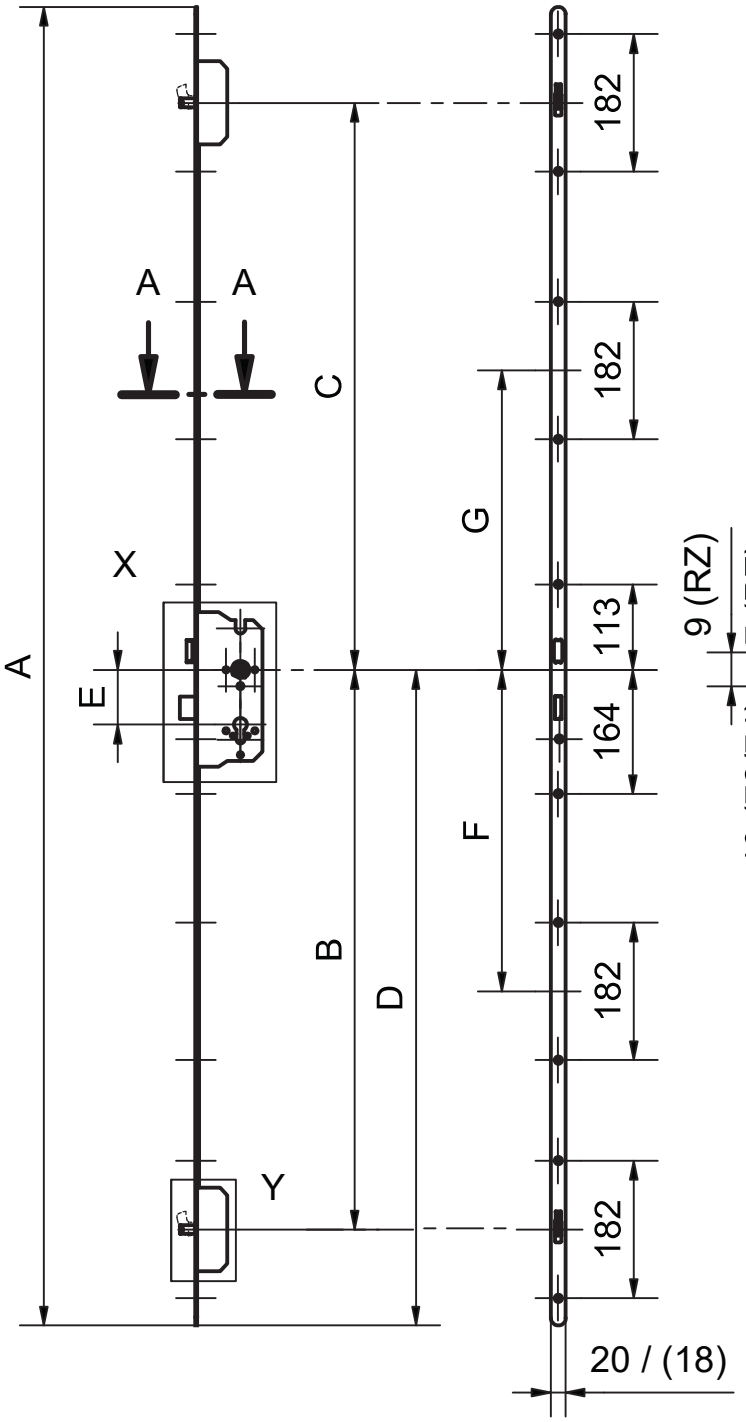

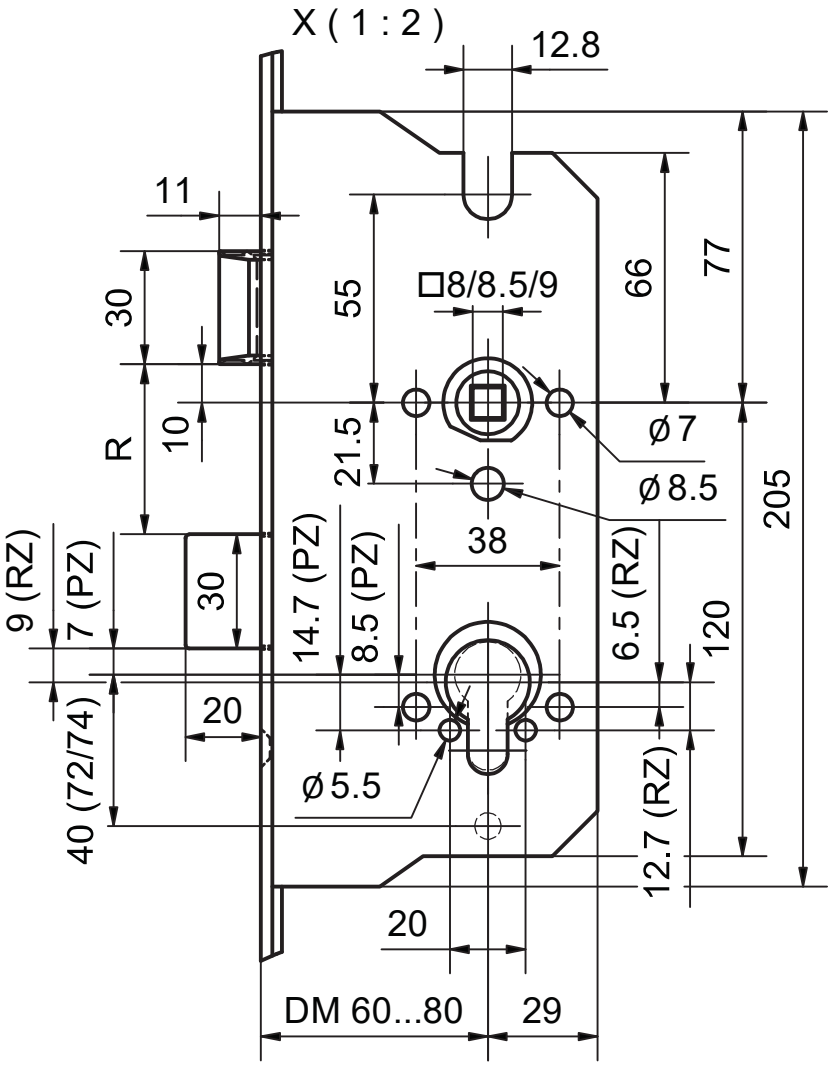

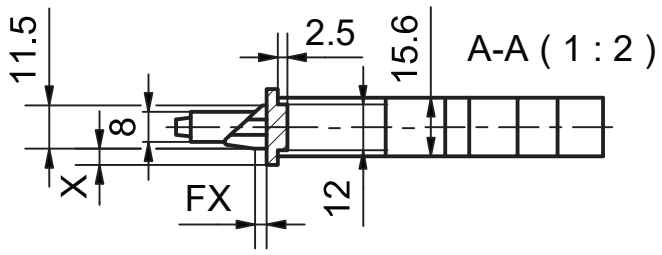

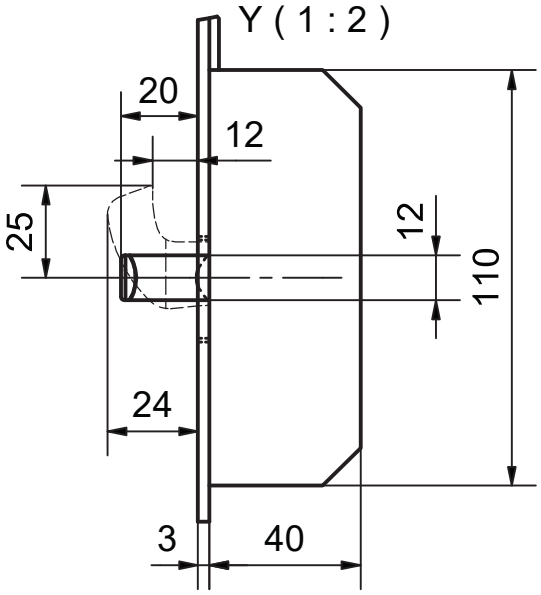

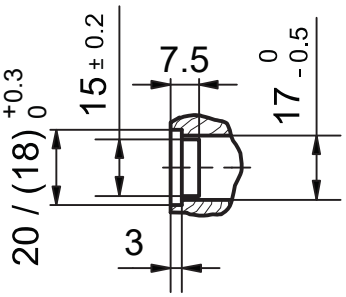

FX [mm]	X [mm] B=18	X [mm] B=20
5	3.8	4.8
4	3.7	4.7
3	3.5	4.5
2	3.4	4.4

E	A	B	C	D	F	G	R
PZ78	1788	804	730	931	450	376	51